NETWORK SERVICE BULLETIN

JBL MODEL 3141

SPECIFICATIONS: NOTE ① ±2dB*

LOAD Z	LOW PASS	CROSS OVER	HIGH PASS	ATTENU-ATION
8	300Hz LF -4 MF -6*	700Hz MF -2	1KHz MF -3	1KHz MF VAR
8	2 KHz HF -12		4KHz HF -9	4KHz HF VAR
8	7KHz HF -11 UHF -11		12KHz UHF -9	12KHz UHF VAR

CIRCUIT:

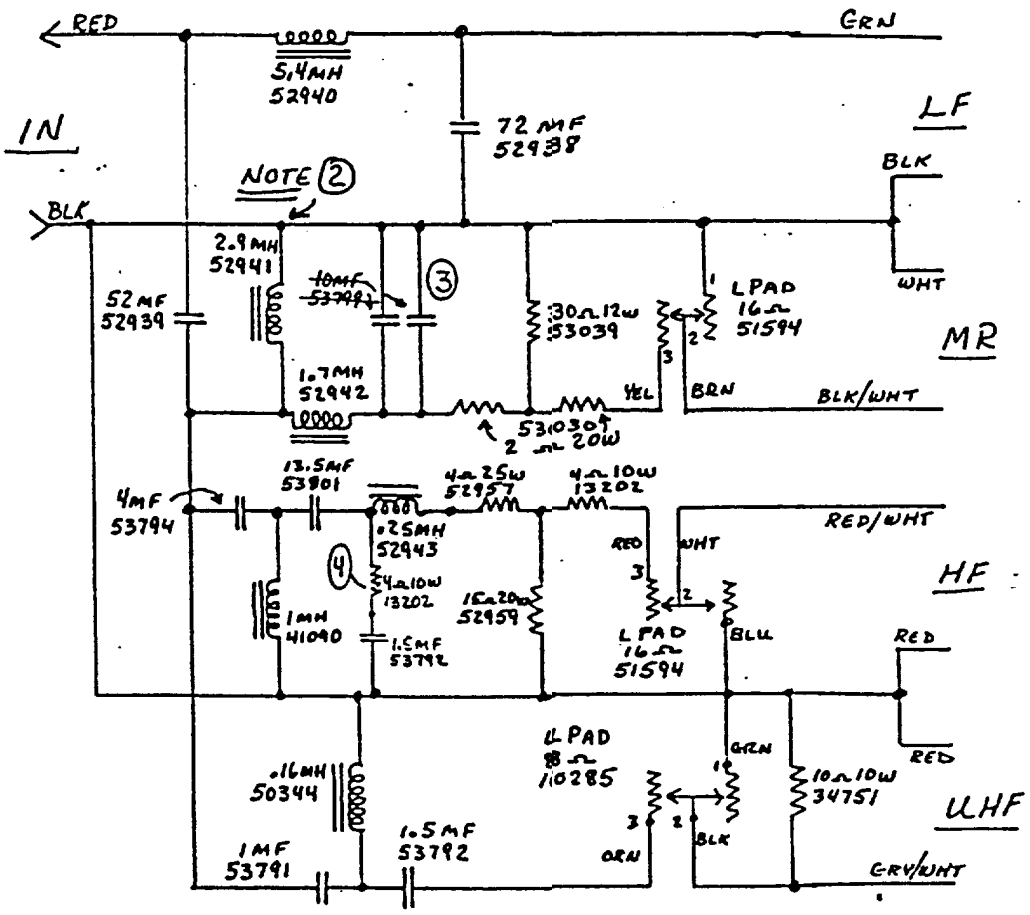

NOTES:

① USE STANDARD TEST FIXTURE

② EARLY UNITS USED A 2.9MH INDUCTOR MADE FROM A 10421P ASS'Y., WHICH MEASURES $1\frac{1}{8}$" x $1\frac{1}{8}$" x 7/8". ALL UNITS FOUND TO HAVE THIS SMALL PART MUST BE MODIFIED BY USING THE 52941 INDUCTOR MADE FROM A 10350P ASS'Y, WHICH MEASURES 2 x 2 x $1\frac{3}{8}$. (E.O. 93138 1-2-75)

③ TWO 10MF (53799) CHANGED TO ONE 20MF (53881)

④ ADDED 4Ω 10W RESISTOR TO PROTECT AMPLIFIER

S	3 - 76
K	9 - 74

PREPARED BY THE JBL SERVICE DEPT. FOR REFERENCE USE ONLY

NETWORK SERVICE BULLETIN

JBL MODEL 3141

SPECIFICATIONS: NOTE ① ±2dB*

LOAD Z	LOW PASS	CROSS OVER	HIGH PASS	ATTENU-ATION
8	300Hz	700Hz	1KHz	1KHz
	LF -4 MF -6*	MF -2	MF -3	MF VAR
8	2 KHz		4KHz	4KHz
	HF -12		HF -9	HF VAR
8	7KHz		12KHz	12KHz
	HF -11 UHF -11		UHF -9	UHF VAR

CIRCUIT:

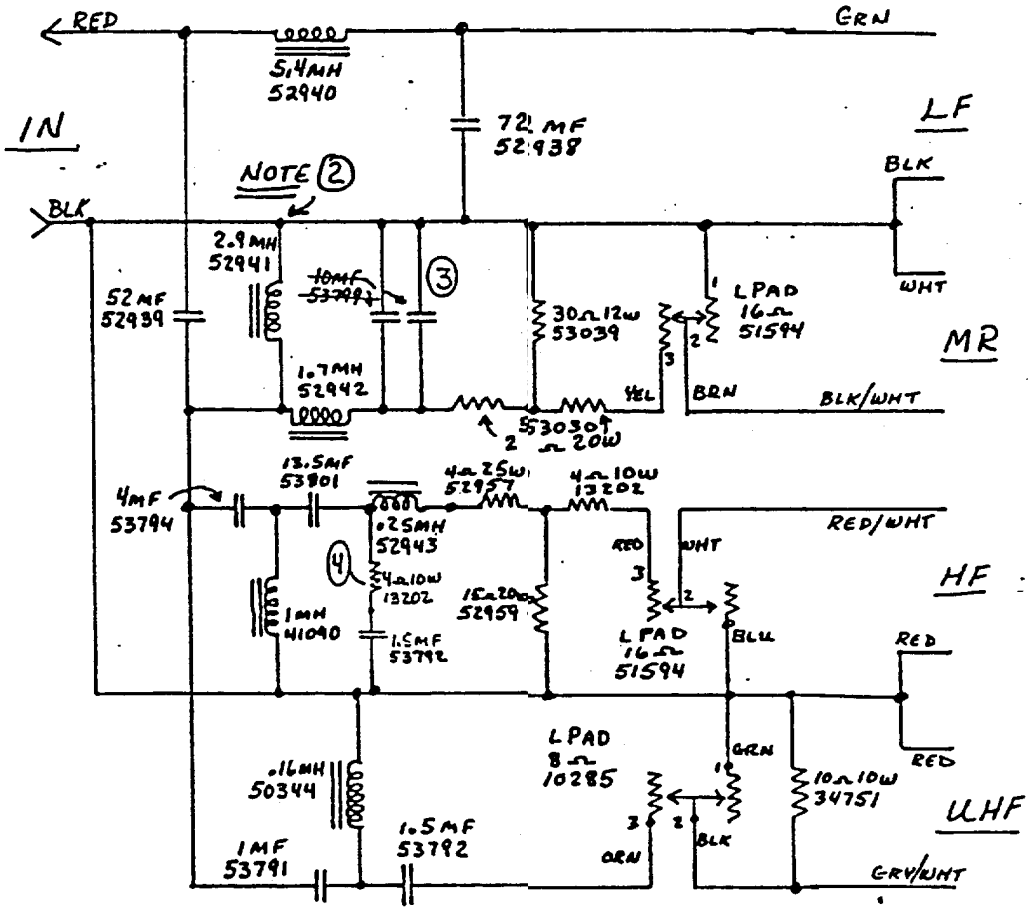

NOTES:

① USE STANDARD TEST FIXTURE

② EARLY UNITS USED A 2.9MH INDUCTOR MADE FROM A 10421P ASS'Y., WHICH MEASURES $1\frac{1}{8}$" x $1\frac{1}{8}$" x 7/8". ALL UNITS FOUND TO HAVE THIS SMALL PART MUST BE MODIFIED BY USING THE 52941 INDUCTOR MADE FROM A 10350P ASS'Y, WHICH MEASURES 2 x 2 x $1\frac{3}{8}$. (E.O. 93138 1-2-75)

③ TWO 10MF (53799) CHANGED TO ONE 20MF (53181)

④ ADDED 4Ω 10W RESISTOR TO PROTECT AMPLIFIER

S	3 - 76
K	9 - 74

PREPARED BY THE JBL SERVICE DEPT. FOR REFERENCE USE ONLY